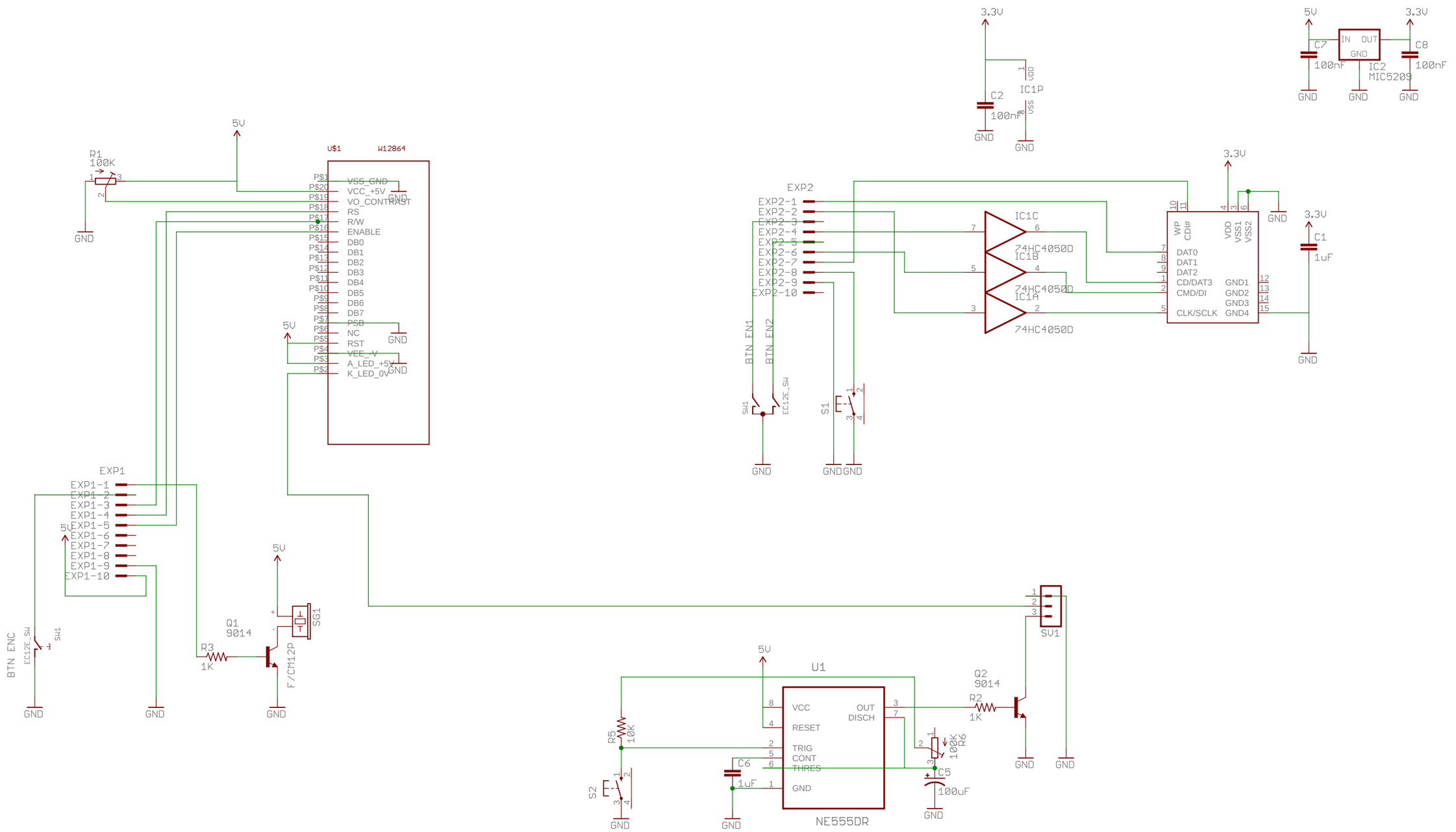

2013-7-23 14:48:43 F:\job\Smart Controller\0715lcd12864\12864.sch (Sheet: 1/1)